Power supply (and USB)

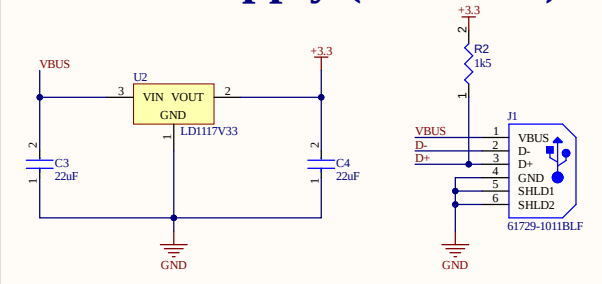

LCD

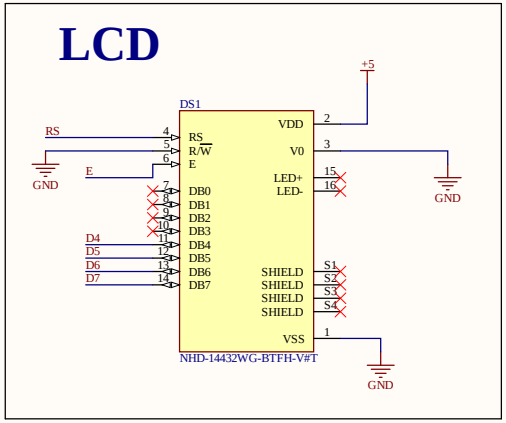

Microcontroller

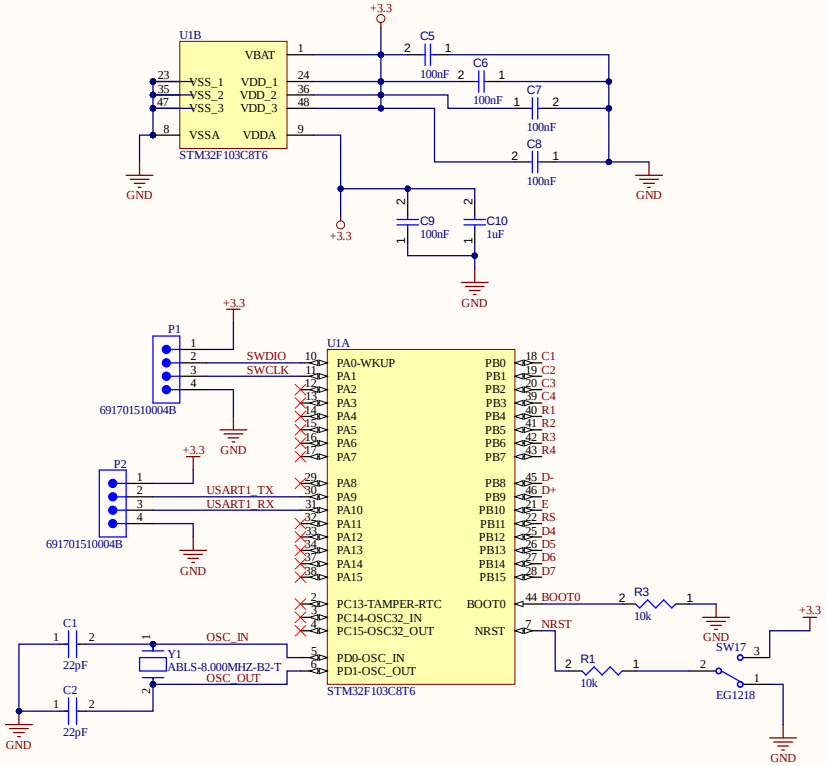

Button

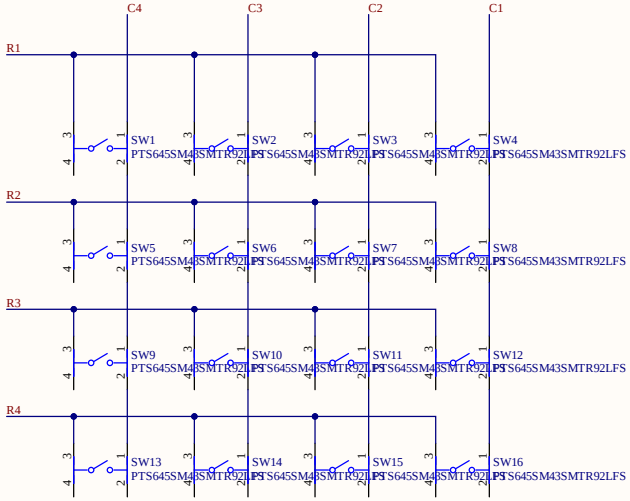

Title Caculator using		
Size A3	Number	Revision
Date: 3/09/2026		Sheet of
File: C:\Users\..\Sheet1.SchDoc		Drawn By: